UNITÀ ESTERNE

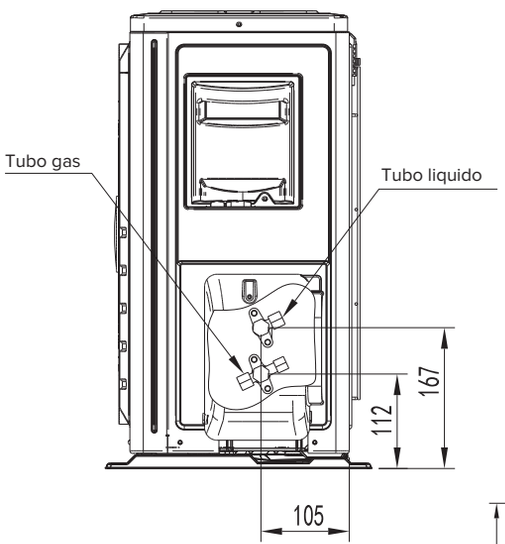

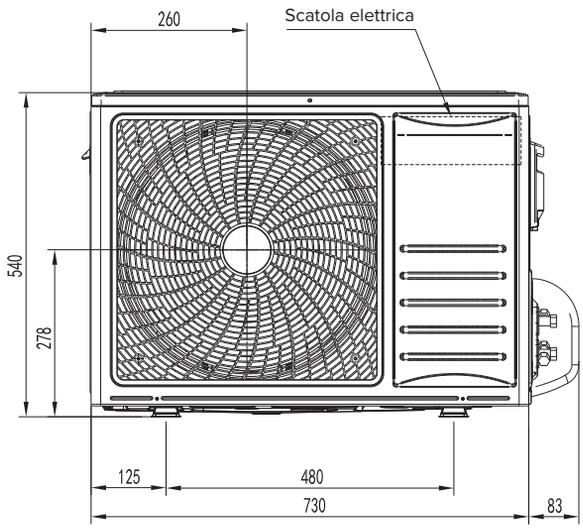

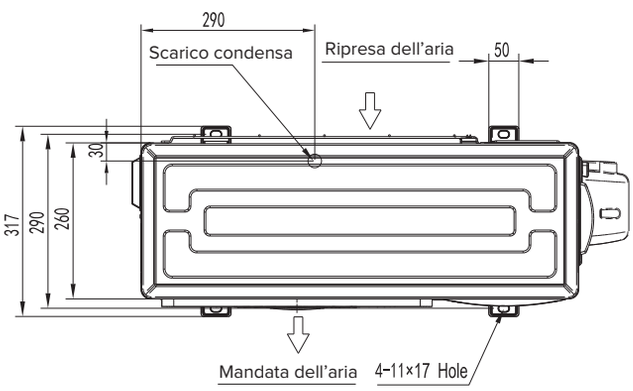

AUW26U4RR4

AUW35U4RS4
AUW52U4RS4

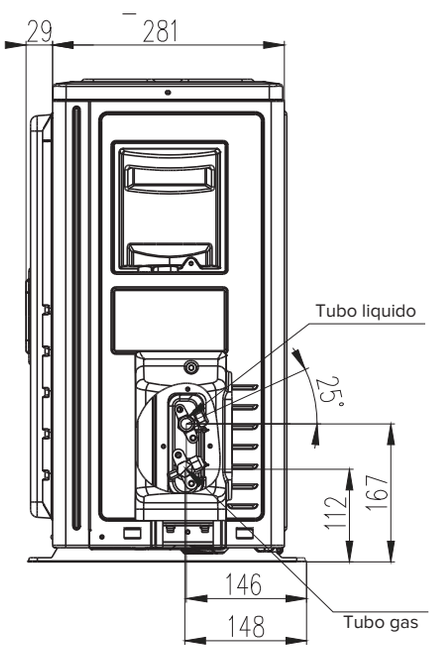

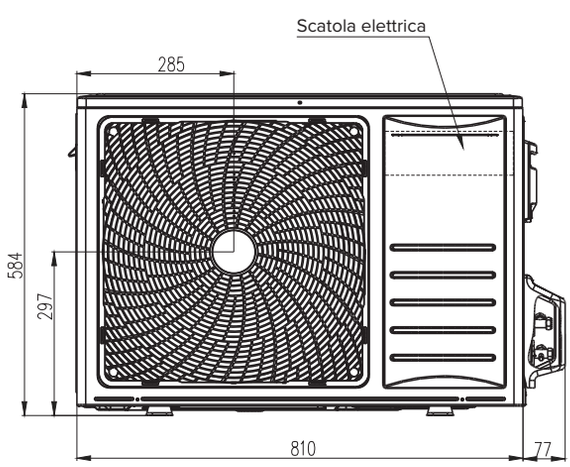

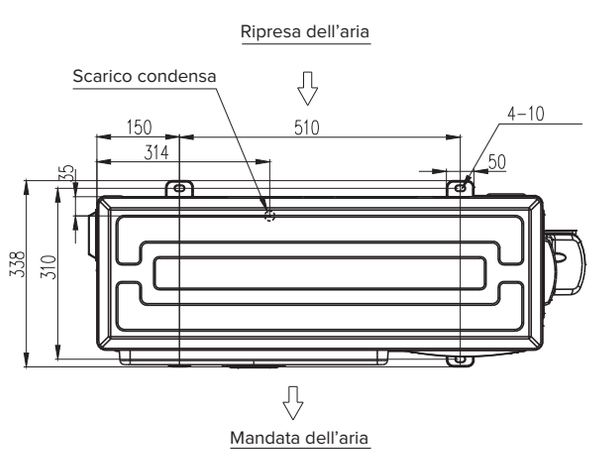

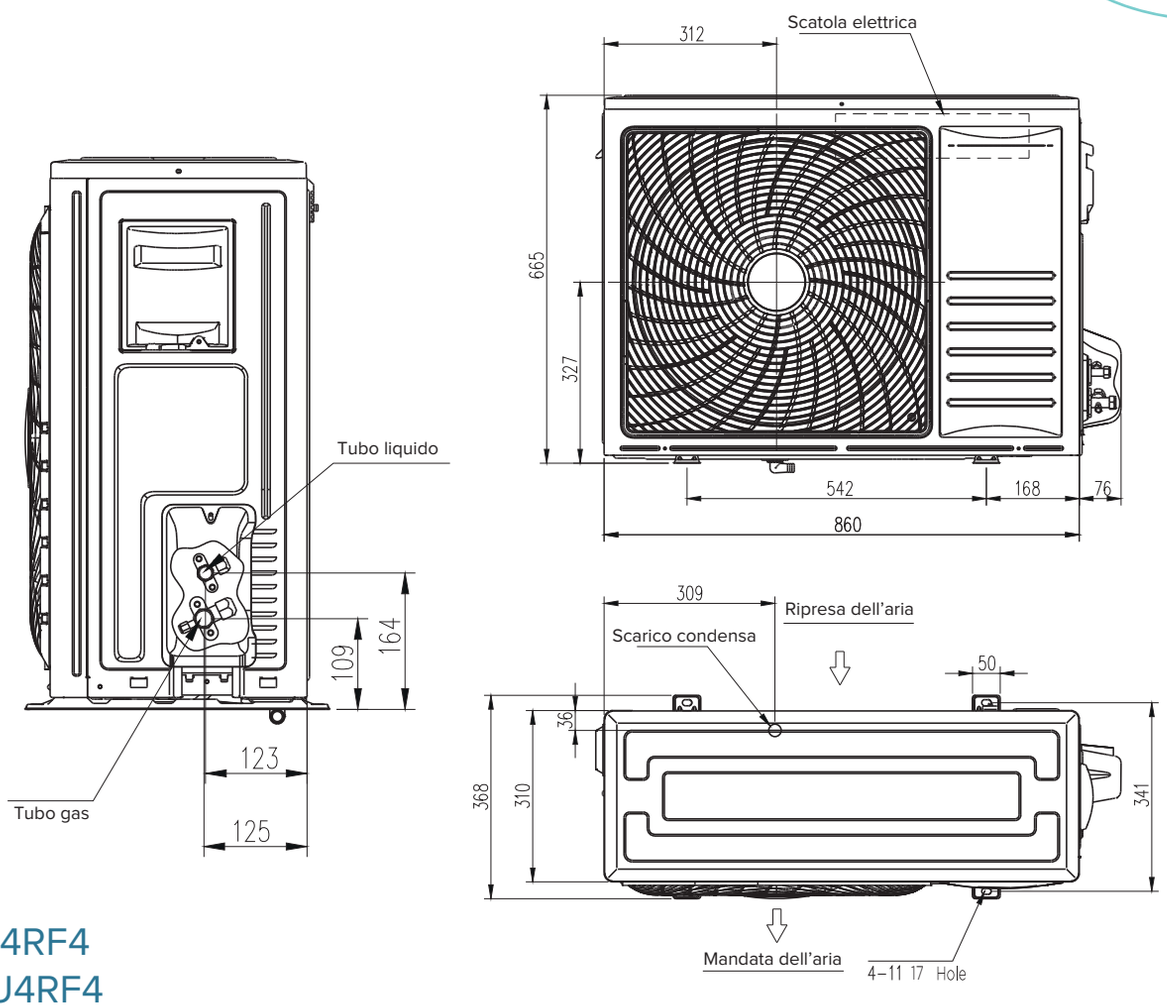

AUW71U4RF4
AUW90U4RF4

AUW105U4RA4

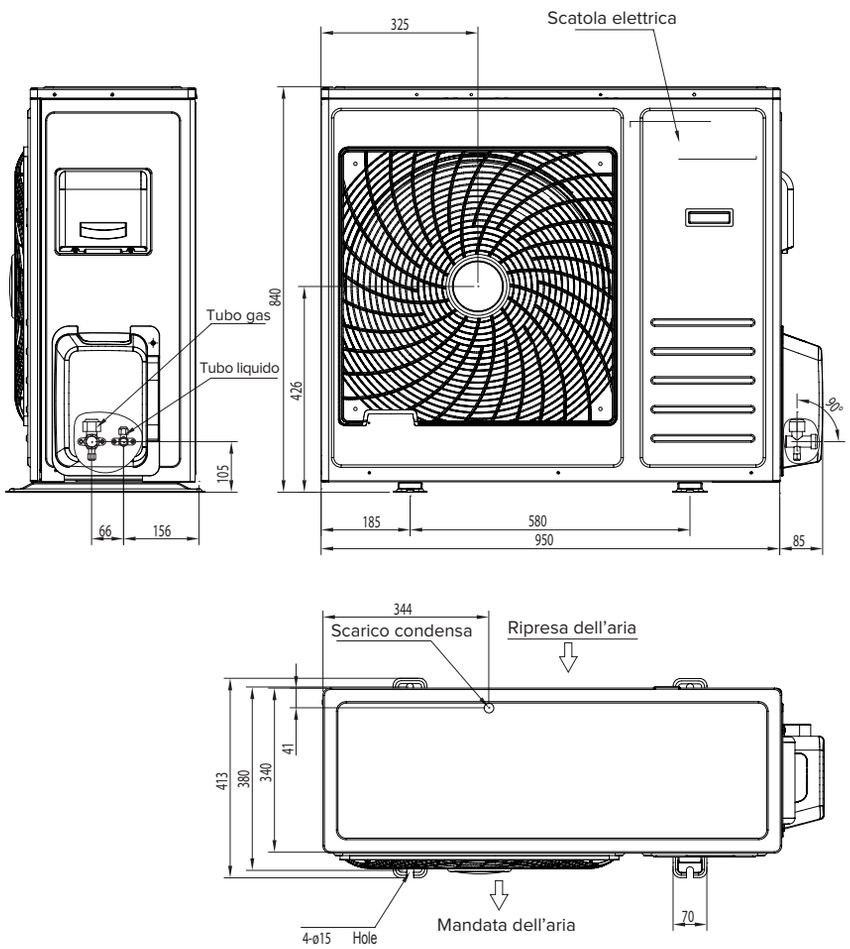

AUW125U4RT5

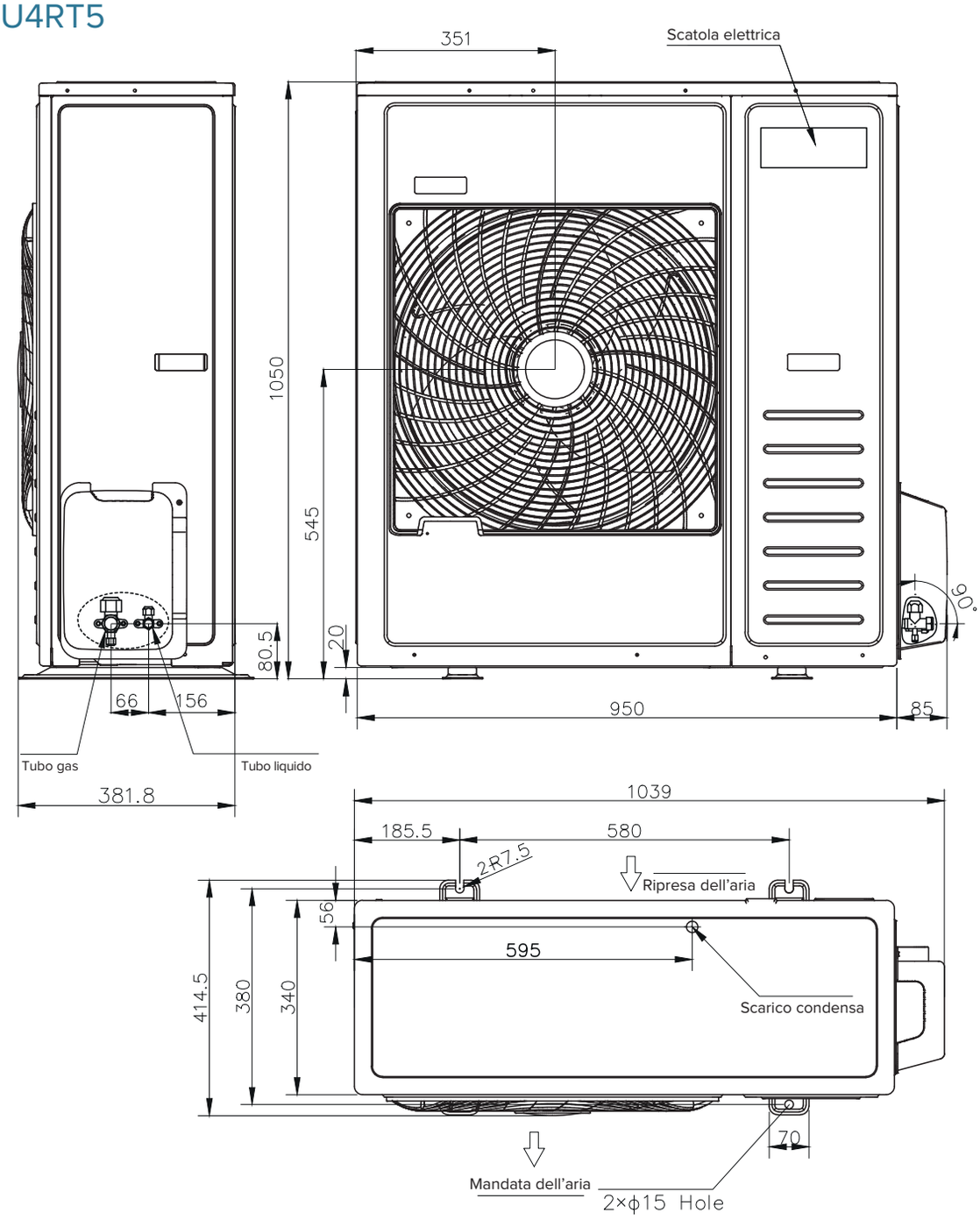

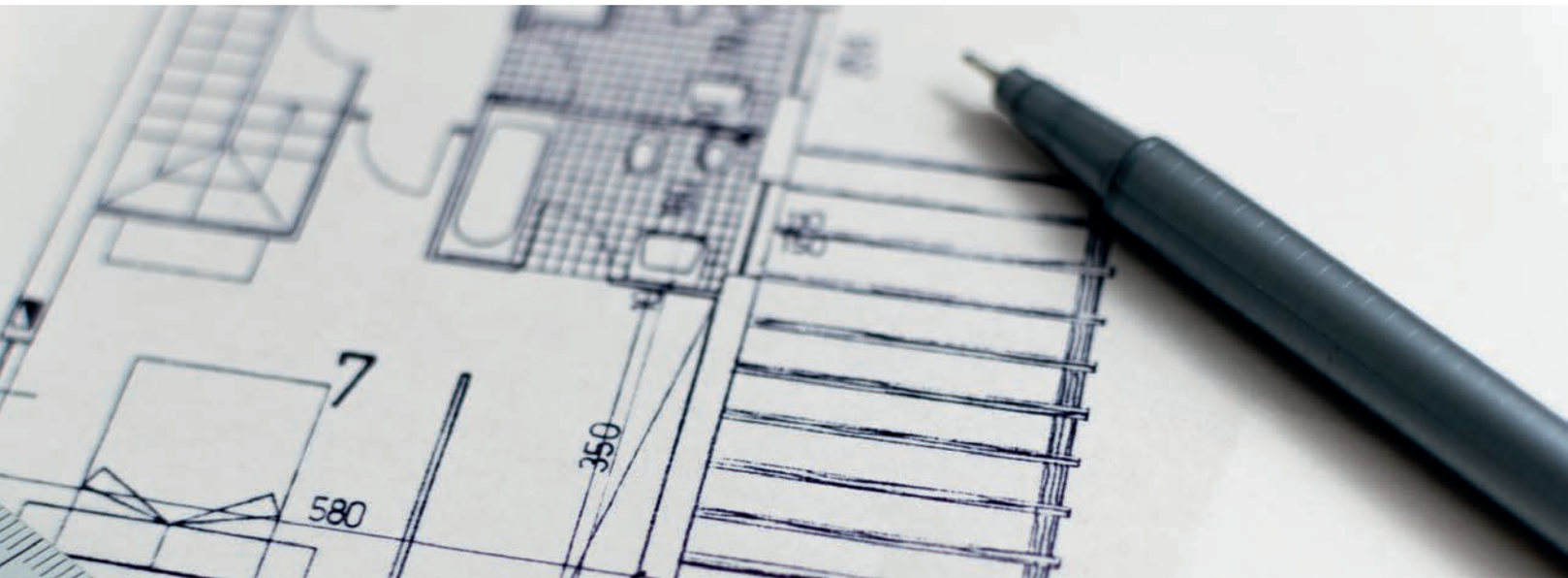

AUW140U6RP4
AUW175U6RP4

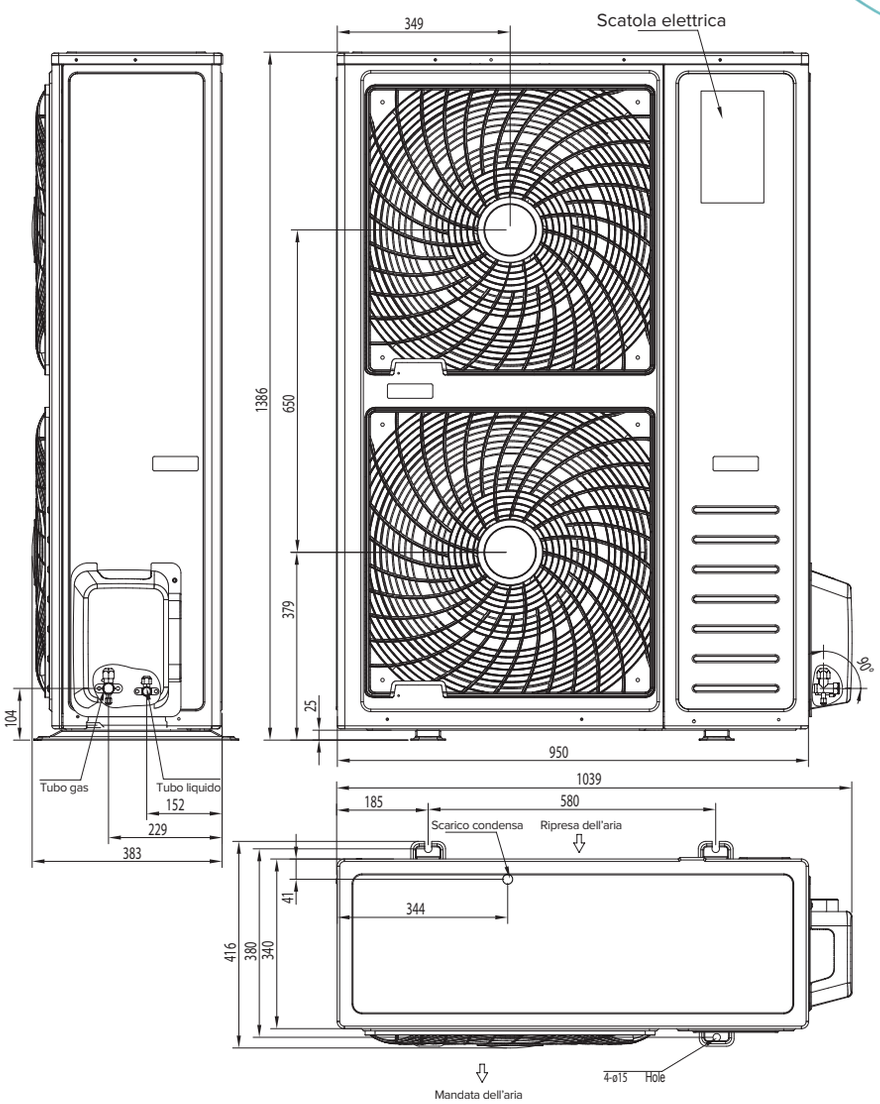

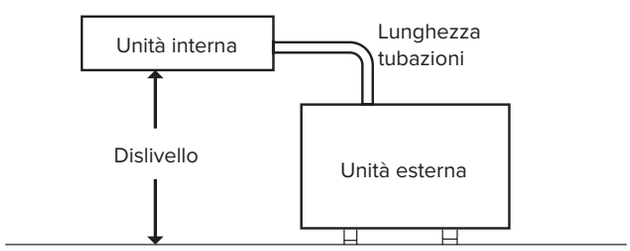

Capacità	Lunghezza max (L)	Dislivello (L)	Carica aggiuntiva refrigerante (oltre 5m)	Precarica refrigerante
2.6 kW	25(m)	10(m)	12(g/m)	750g
3.5 kW	25(m)	15(m)	12(g/m)	850g
5.2 kW	30(m)	15(m)	12(g/m)	970g
7.1 kW	50(m)	30(m)	28(g/m)	1400g
9.0 kW	50(m)	30(m)	28(g/m)	1450g
10.5 kW	50(m)	30(m)	28(g/m)	2000g
12.5 kW	50(m)	30(m)	28(g/m)	2500g
14.0 kW	50(m)	30(m)	28(g/m)	3000g
17.5 kW	50(m)	30(m)	28(g/m)	3400g